micro poli

WLS multifunction magnetic contact

Installation guide

KSI5008000.301 - white
KSI5008000.302 - black
KSI5008000.304 - brown

INTRODUCTION

micro poli is a wireless multifunction sensor, in compliance with the wireless bidirectional 868 MHz protocol used by Ksenia Security. Inside a very small case characterized by an essential and minimalist design, **micro poli** is much more than a simple magnetic contact.

micro poli is:

- an **anti-masking magnetic contact** to detect the opening of doors and windows;
- an **inertial sensor** to detect the vibrations of increasing intensity up to the breaking of glass/windows;
- **able to measure the inclination** of the window/door frame it protects, it allows the management of any type of window opening (casement window, tilt and turn window, bottom hung windows, etc.) which it would otherwise be impossible with only the magnetic contact.

As anti-masking magnetic contact with two REEDs (long side/short side) inside the transmitter, it is extremely suitable for any type of door or window frames thanks to the installation position of the magnet with respect to the transmitter. It is also possible to activate only one REED to detect the opening of the window, according to the type of installation; masking attempts by applying a more powerful magnet outside the frame can be detected, in this case it triggers a masking signal while the opening of the contact triggers a Zone Alarm.

As inertial sensor, thanks to the 3-Axis accelerometer based on MEMs technology, when the vibration exceeds the programmed sensitivity threshold, it triggers an alarm.

As advanced sensor, thanks to the 3-Axis accelerometer, it measures the angle of inclination of the window within which the zone is considered on idle and beyond which it triggers an alarm.

As all the other KSENIA wls devices, **micro poli** implements DPMS (Dynamic Power Management System) which allows to dynamically reduce interference and energy consumption of battery and optimize the power transmission according to the distance between devices and the type of installation too. Besides, it is possible to program the interval of supervision from 1 to 240 minutes.
A tamper switch, which detects the cover opening and removal, can be disabled.

The lithium battery duration (CR2477 3V - not rechargeable) is guaranteed for 4 years.
The case is compliant with IP4X protection degree so that it can be installed also in case of humidity and condensation.

The height of the device can be adjusted by adding up to three shims to the transmitter and magnet bodies, to fit better most of frames installations.

Descriptions and features

- n. 2 REEDs to detect the opening of doors and windows. Thanks to two REEDs placed in different positions inside the device, **micro poli** fits any type of frame and installation position; the double REEDs detect the masking attempts by applying a more powerful magnet outside the frame and trigger a masking signal. REEDs can be configured also to work singularly;

- n. 1 accelerometer based on 3-axis MEMS technology that allows double use: as an inertial sensor for the detection of vibrations, by means of the measurement of programmable sensitivity, triggering an alarm; as an advanced sensor, to measure the angle of inclination of the frame on which it is installed, it allows to generate an alarm when the frame exceeds the programmed angle of inclination;

- n. 1 tamper switch, which detects the cover opening and the removal from the wall and that can be disabled.

- n. 1 lithium battery (CR2477 3V - not rechargeable), duration is guaranteed for 4 years and monitor of level battery from Installer interface.

TECHNICAL CHARACTERISTICS

- Power supply: lithium battery CR-2477 3V (duration 4 years) included
- Low battery voltage 2.1V
- Frequency: 868 MHz
- Open Air Range: up to 300m
- 2 solid state REED switches
- 3-Axis accelerometer (MEMS technology)
- Tamper switch against cover opening and its removal
- Protection degree: IP4X
- Temperature Range: +5°C +40°C
- Transmitter dimensions: 39x52x22mm (LxHxW)
- Magnet dimensions: 15x39x17mm (LxHxW)
- Optional stackable shims for transmitter and magnet: height 2.8mm each

DESCRIPTION

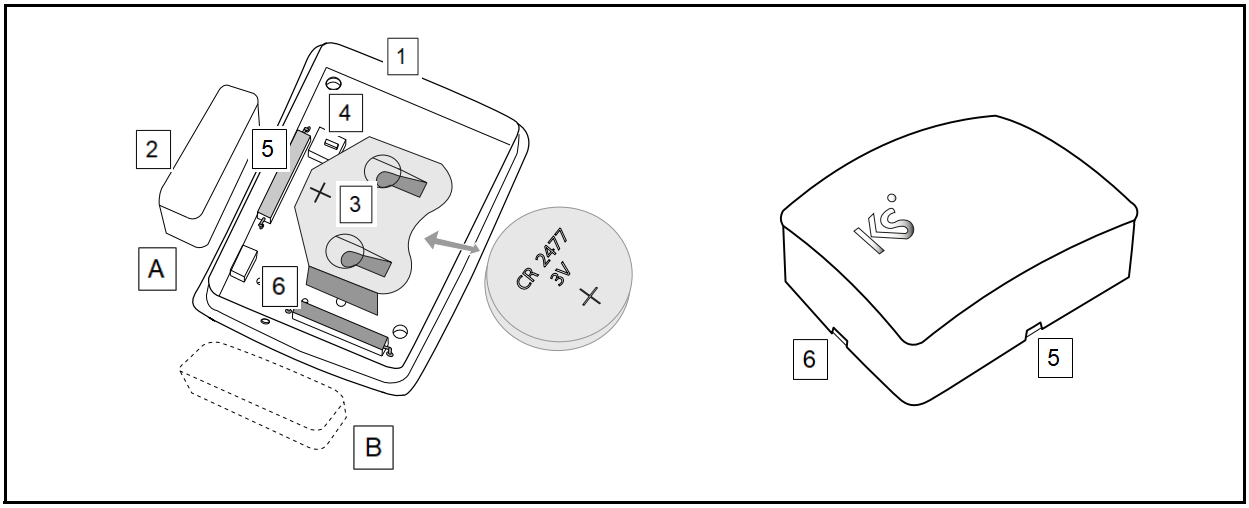

Legend
1. Transmitter Inside cover
2. 1 magnet: two possible positions (A and B)
3. CR2477 button battery holder
4. Tamper micro-switch
5. REED long side / External indication of magnet position
6. REED short side / External indication of magnet position

Internal signalling red LED. By setting the test mode on panel, this LED blinks whenever the device successfully transmits an alarm or reset signal.

INSTALLATION

1. Open transmitter and magnet covers;
2. insert the button battery into the battery compartment;
3. if necessary, install the stackable shims for transmitter and magnet;
4. for positioning micro poli, please follow the instructions described below;
5. to fix the micro poli to the frame, use the adhesive strip provided or self-tapping/self-drilling screws, diameter 3.5mm, rounded cylindrical head;
6. when finished, close both covers.

micro poli

Top view | Base internal view with screws | Back view with screws

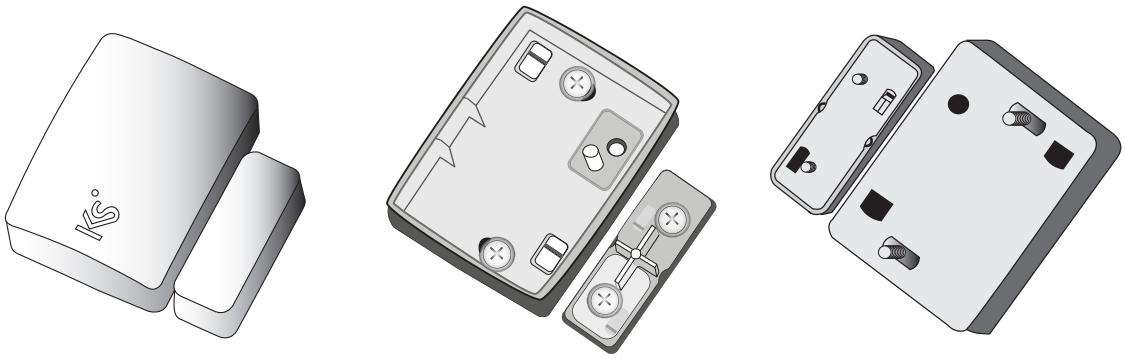

POSITIONING

The transmitter can be installed in different positions, thanks to its two REEDs, as shown in the following image:

Transmitter orientation

long side | short side

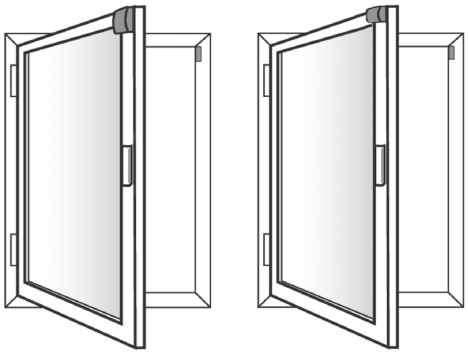

Please find below some installation examples.

Side-hung casement window

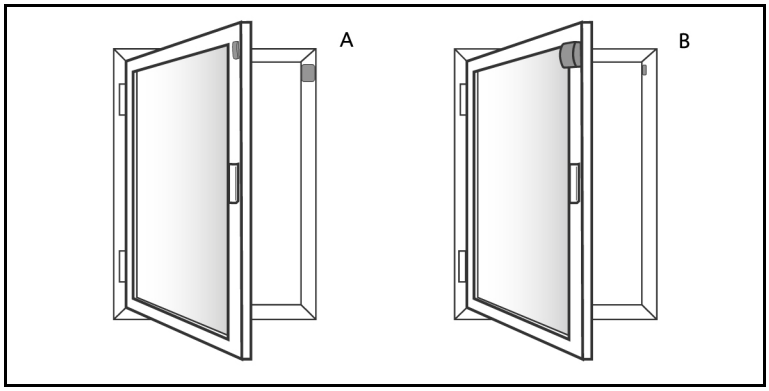

- To use micro poli as a magnetic contact (figure A) place the transmitter on the frame and the magnet on the mobile door. Figure B shows an optional installation.
- The distance between the magnet and the indicator on the transmitter must not exceed 10mm.

Tilt (Vasistas)(*) and Turn window

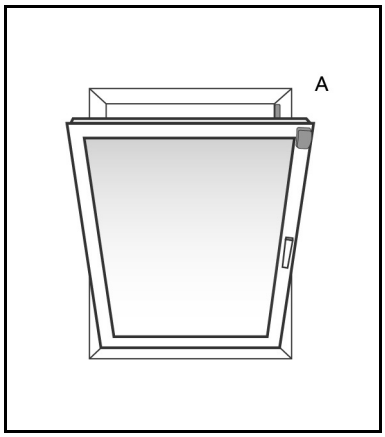

- To use micro poli as a magnetic contact on a tilt-and-turn window, it is necessary to fix the transmitter on the mobile door and the magnet on the frame.
- The distance between the magnet and the indicator on the transmitter must not exceed 10mm.

(*) **Warning!** By enabling the tilt (vasistas) inclination mode, compliance with EN50131 grade 2 standard will be lost.

Fixed glazing window *(not certified)*

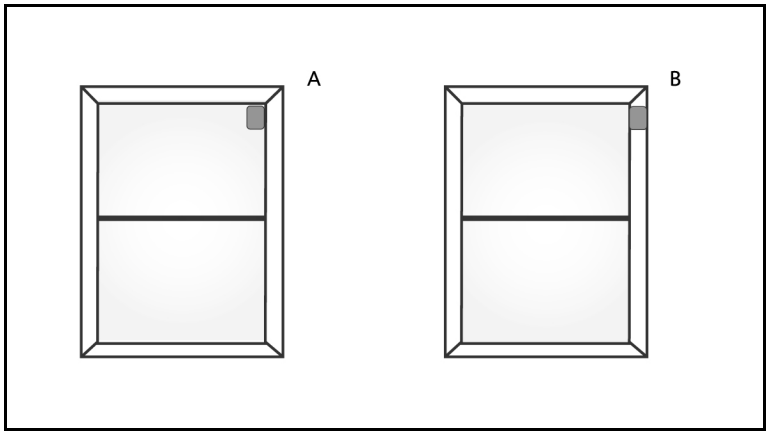

- Place only the micro poli transmitter, without the magnet, directly on the glass (figure A) or on the frame (figure B).

Operating distances

On the mounting surface (not ferromagnetic), for all configurations and the axes of operation (x - y - z) based on how the device is installed.

Vertical installation of the detector		
Axis x	Closed contact 20 mm	Open contact 30 mm
Axis y magnet at 10mm	Closed contact 20 mm	Open contact 30 mm
Axis z magnet at 10mm	Closed contact 20 mm	Open contact 25 mm

To be compliant with the certifications, for the anti-opening, drill a hole at the point indicated inside the box and insert a screw self-tapping, diameter 2.2mm, length 4,5mm, rounded cylindrical head as shown in next figure.

For the anti-removal, insert a screw inside the box, at the point indicated in next figure, and screw on the frame.

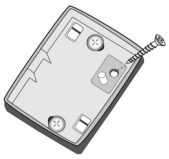

Replacing the battery

1. Open the front cover - 2. Replace the battery inside the upper cover

Note: temperatures below +5 °C can cause the micro poli to report a false low battery indication. Operation below +5 °C will reduce the battery life significantly. Caution! Observe the correct polarity when installing battery. Use only lithium CR-2477 3V batteries for replacement.
Warning! Battery may explode if mistreated. Do not recharge, disassemble or dispose of in fire. Dispose of used batteries according to the instructions. The supplied product contains a battery with a button/coin element. Do not swallow the battery. Danger of chemical burn. If the battery is swallowed, it can cause severe internal burns in just 2 hours and lead to death.
Keep new and used batteries away from children.
If the battery compartment does not close securely, suspend the use of the product and keep it away from children. In case of suspected ingestion or insertion of the battery into any other body orifices, seek medical advice immediately.

CONFIGURATION

1. Start the configuration of micro poli from Installer-> Wireless Peripherals -> Wireless sensors configuration program;
2. add the micro poli and enter the serial number printed on the device label;
3. save and apply the programming;
4. in a few seconds the icon of the radio signal level detected and other data will appear in the real time section, if correctly installed.

The following images show an example of a micro poli real time section correctly acquired by the lares 4.0 control panel and the description of the values:

	RF reception - Radio signal level with the following values: Radio signal 1 (higher than -76dBm) Radio signal 2 (between -90dBm and -76dBm) Radio signal 3 (between -100dBm and -91dBm) Radio signal 4 (lower than -101dBm)
	RF head of the receiver to which the device is hooked
	Signal strength in dBm referred to the receiver to which the device is hooked
	Serial number of the device
	Opening angle (if on idle and magnetic contact and vasistas are enabled, a dash <-°> is displayed instead of an angle measure = 0°)

	Battery level signal: green = battery charged yellow = warning battery level, charge at 25% red = warning battery level, charge at 10% red with <!>= low or failure battery followed by “Battery failure” event

In case of installation on a casement window

- micro poli has an anti-opening and removal tamper and the associated zone (or zones) generates a sabotage alarm if the device is opened or removed. Possibility to exclude the analysis of the tamper by disabling the sabotage.
- Set the position of the magnet with respect to the sensor (long side / short side).
- Enable / disable the masking analysis of both reeds contacts. This configuration affects the real time of the zone together with the state of the reeds contacts (open / closed).
- Add a **Magnetic contact Zone**, assign it to micro poli.
- (Option) If you want to set up the inertial sensor operation **as well**:
  1. set up the sensitivity level considering that the vibration propagation depends on the material on which it is installed;
  2. it is possible to disable the glass break detection when the magnetic contact is open;
  3. add an **Inertial Zone**, assign it to micro poli and configure the appropriate values.

Installation on a tilt and turn window

- Three vasistas settings at your choice:
  1. Enable vasistas analysis: set the maximum vasistas opening angle within which the zone is on idle;
  2. Enable advanced vasistas analysis: set the maximum vasistas opening angle within which the zone is on idle and assign a partition to the micro poli wireless peripheral, so when a total arming is performed (which obviously includes the partition assigned to the micro poli), the vasistas opening of the window on which micro poli is installed, will result in alarm as any other zone.
  Example: suppose that a "Window" partition is assigned to the micro poli wireless device and suppose to execute a Total Arming (which obviously includes the "Window" partition). If the window in question is open tilted, the system cannot be armed, the window must be closed or excluded; if not excluded, the window will trigger an alarm when open tilted.
  However, please note that the seismic zone, if configured, will always be active.
  3. Disable vasistas analysis: the opening angle field is not selectable, it is automatically set to 0° degrees.
- Add a **Magnetic contact Zone**, assign it to micro poli.
- (Option) If you want to set up the inertial sensor operation **as well**:
  1. set up the sensitivity level considering that the vibration propagation depends on the material on which it is installed;
  2. it is possible to disable the glass break detection when the magnetic contact is open;
  3. add an **Inertial Zone**, assign it to micro poli and configure the appropriate values.

Installation on a fixed glazing window

- "Disabled with open window" parameter must be disabled (default value).
- Set up the sensitivity level considering that the vibration propagation depends on the material on which it is installed.
- Add an **Inertial Zone**, assign it to micro poli and configure the appropriate values.

Summary table of Magnetic Contact Zone real time

The real time of the zone (alarm / idle / masking) varies according to the REEDS contacts set up (long side or short side, identifiable by the indicators on the cover of the transmitter), and to the "Masking" parameter set up (valid for both REEDs contacts).

SET UP	MAGNETIC CONTACT STATUS O = Open C = Closed		REAL TIME ZONE if "Masking" enabled	REAL TIME ZONE if "Masking" disabled
Long side	O	O	Alarm	Alarm
	O	C	Masking	Alarm
	C	O	Idle	Idle
	C	C	Masking	Idle
Short side	O	O	Alarm	Alarm
	O	C	Idle	Idle
	C	O	Masking	Alarm
	C	C	Masking	Idle

DIAGNOSTIC

The diagnostic of micro poli offers:

1. the visualization of the real-time status of the wireless peripheral;
2. the visualization of the real-time status of the zones associated with it;
3. in case of battery failure, the "Battery failure" event is sent;
4. in case of failure of the peripheral itself, the "Missing wireless peripheral" event is sent;
5. in case of failure of the peripheral itself, on the Home page -> Faults and tampers section, the message "micro poli - Missing wireless peripheral" appears, it is even a link to click and open the related configuration page.

QUANTITY DATA

lares 4.0 models	wls 96	16	40	40 wls	140 wls	644 wls
Maximum number of wls sensors	32	16	40	40	64	64

Technical specification, appearance, functional and other product characteristics may change without notice.

COMPLIANCE

- Europe - CE, RoHS
- EN 50131-1:2006 + A1:2009 + A2:2017 + A3:2020
- Grade 2 - Class I
- INCERT: T031 2017 + A1:2018 + A2:2022
- SBSC: SSF 1014 - utgåva 6 - Larmklass 3

D-Q2T-0031