vox-M

Outdoor siren (BUS)

Installation manual

KSI6301011.301

INTRODUCTION

vox-M outdoor siren is a luminous and powerful alarm sounder, high sound emission with high output magnetodynamic exponential horn which plays dual-tone sound and personalized voice messages according to the software configuration; it is equipped with two high brightness multicolor LEDs and a third LED spotlight so as it can be managed as a "light" output in the system.

vox-M siren is powered by KS-BUS of lares 4.0 (13.8V) and by a 12V backup battery (not included) in case of power failure; voltage current on BUS and battery charge level are constantly monitored, the values are shown on real time section of BUS peripheral. In addition, the control panel is able to report both the lowering charge level of battery and any battery failure.

vox-M siren is protected against opening or removal from wall (tamper protection), BUS wire-cut, anti-foam tamper system and it is designed for the anti-drilling tamper. In addition, it is equipped with a temperature sensor to display the temperature on display of Ksenia keypads and lares 4.0 User App but also on the real time of vox BUS peripheral.
Resin insulation of electrical equipment and materials used guarantee resistance against bad weather conditions, over time.

Easy to install because it is connected to lares 4.0 via the KS-BUS, vox-M is also easy to program as it allows remote configuration.

MAIN CHARACTERISTICS

- Magnetodynamic speaker exponential resistance 4ohm;
- 2 multicolor signaling LEDs;
- 1 spotlight white LED: 6000K, turning ON only if powered by BUS (it is not sufficient the battery alone);
- 3 tampers: anti-opening, anti-removal and anti-foam;
- designed for the anti-drilling tamper;
- metallic under-cover, ABS bottom of case and external cover;
- 1 temperature sensor to display the temperature on the Ksenia keypads and on lares 4.0 User App;
- In case of power failure from KS-BUS, a 12V 2Ah lead backup battery (not included) supplies the siren, if the battery voltage drops below 9V the siren turns off;
- programmable monotone or two-tone sound;
- programmable voice messages.

TECHNICAL CHARACTERISTICS

Power supply by KS-BUS ..... 13.8 V (max) - 9V (min)
Backup battery (not included) ..... 12V - 2Ah Pb
Absorption MAX ..... 350 mA
Medium noise level ..... 105 dB(A) - 1m
Minimum noise level ..... 99 dB(A) - 1m
Magnetodynamic speaker exponential resistance ..... 21W 4 ohm
Security grade 3
Environmental class IV
Protection level IP44
Operating temperature..... -25°C +55°C
Dimensions 310x226x92mm
Weight ..... 1.8 Kg (without battery)

DESCRIPTION OF THE PRODUCT

Dimensions

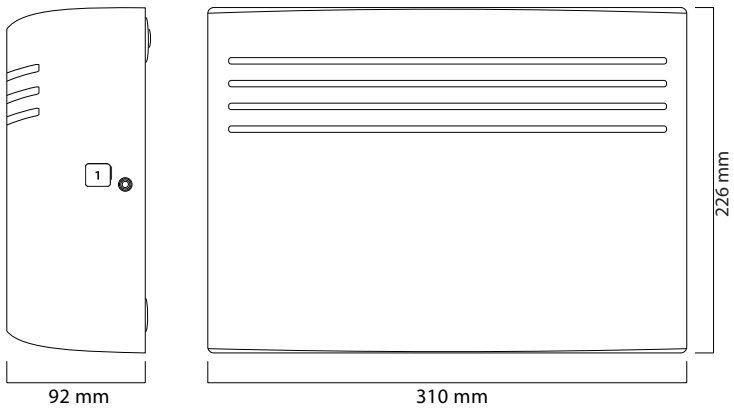

Dimensions: 310 x 226 x 92 mm (LxHxW).

Legend:

[1] Screw to open the cover.

Back

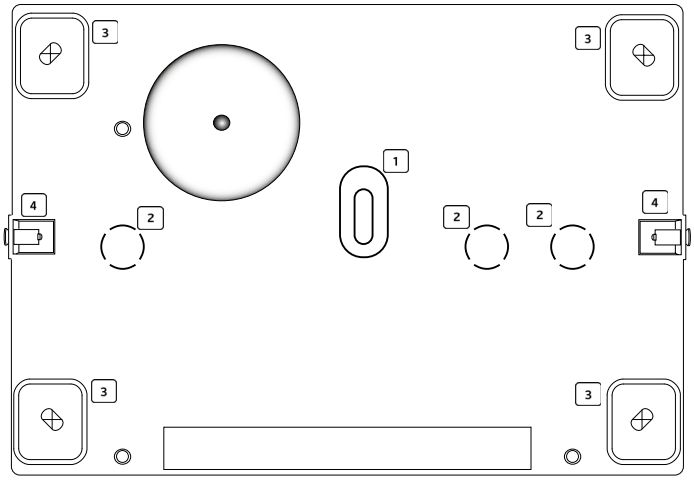

Legend:

[1] Tamper anti-removal from the wall
[2] Breakable holes for the cables passage
[3] Back siren locking holes to the wall
[4] Two screws to open the cover

Internal cover

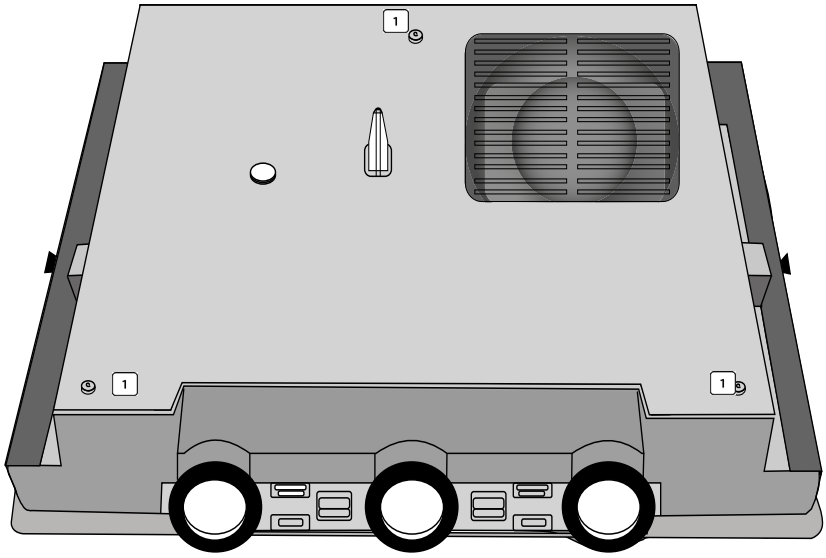

Legend:

[1] Undercover locking / opening screws.

Inside view

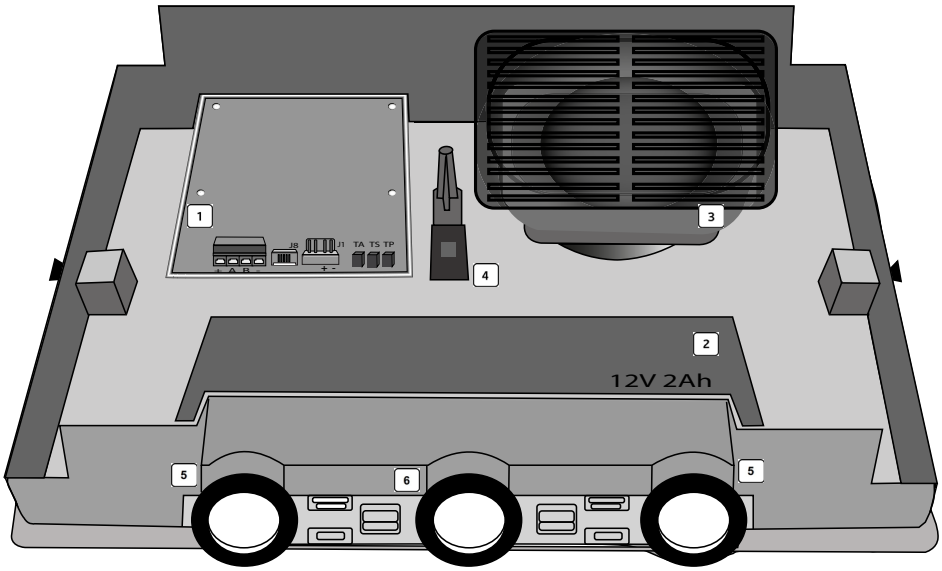

Legend:

[1] vox PCBA
[2] 12V/2Ah lead battery (not included)
[3] Magnetodynamic exponential speaker
[4] Anti-opening tamper
[5] Multicolor LEDs
[6] High brightness LED

PCBA vox

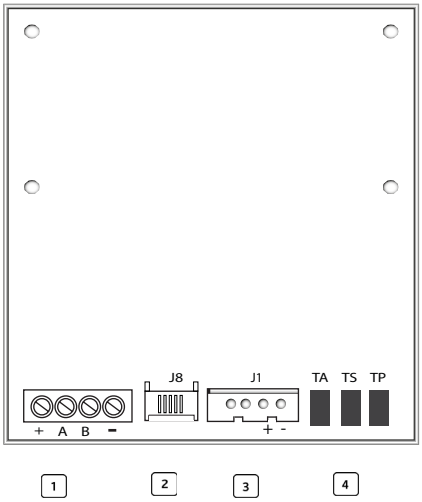

[1] Connection clamps to the KS-BUS of lares 4.0
[2] Connector for LED/spotlight connection
[3] Connector for battery and horn connection
[4] TA connector TA for anti-opening and anti-removal
[5] TS connector for anti-mousse
[6] TP connector for anti-drilling (designed for anti-drilling)

INSTALLATION

The siren has to be installed in a hardly accessible location to deter tamper attempts. The wall chosen must not have any depression or protrusion in order to avoid compromising the tamper protection function.
To ensure a correct installation comply the following steps:

1. Drill 4 holes on vertical wall, use the drilling guide for dimensions, see figure below;

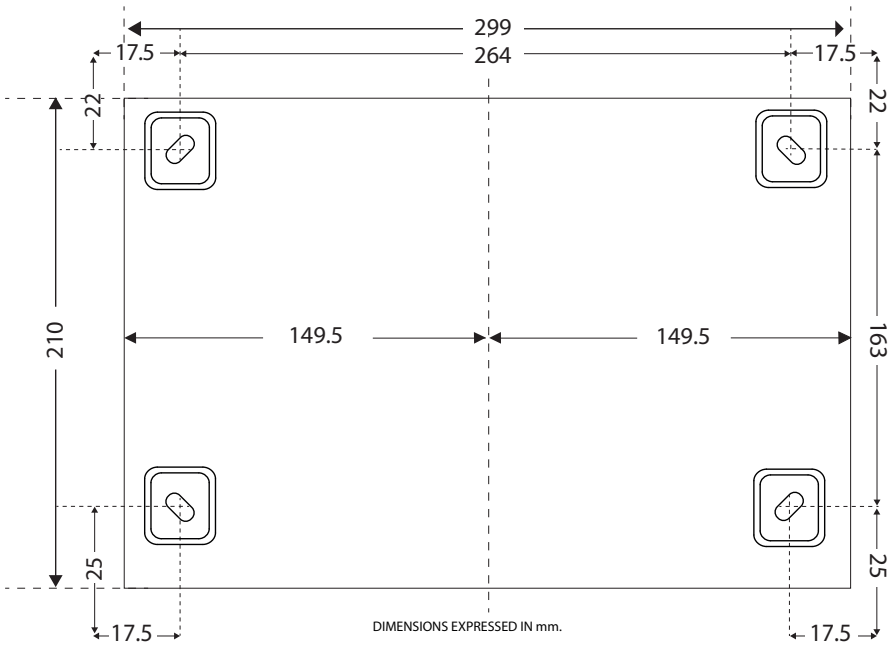

2. unscrew the screws to open the external cover (see also "Dimensions" page 3) and internal cover (see also "Internal cover" page 5);

3. pass the cables coming from the control panel through the breakable holes (see also "Back" page 4);

ATTENTION! The supplied neoprene flat washer must be positioned between the bottom of the siren and the wall by passing through its central hole the duct that carries the electric cable inside the siren. The washer is used to prevent the possible formation of condensation inside the siren during the winter.

4. match the holes to fix the bottom of the siren to the wall, with 6mm wall plugs and screws for wall plugs (included);

5. connect the vox connection clamps to the KS-BUS of lares 4.0, see figure below;

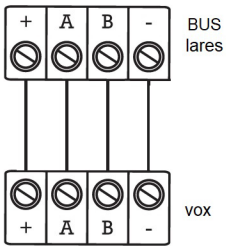

TERMINALS DESCRIPTION		
A B	KS-BUS	Ksenia BUS terminals
- +	BUS supply	Terminals of BUS supply 13.8V

6. place the battery and connect it using the fastons present at the end of the cable connected to the connector (J1) on vox PCBA (see also "PCBA vox" page 7);

7. close the undercover and the cover and screw on.

FIRMWARE COMPATIBILITY

The management of the vox-M siren requires firmware version 1.84.1 or later.

CONFIGURATION

BUS Peripherals configuration

1. Once the installation is over, connect to the control panel through the WEB "Installer" application and open BUS PERIPHERALS menu -> SIRENS -> vox-M, the real time of the vox-M siren will show a yellow icon because it is not registered in the system yet.
   Now, you have to enter the serial number printed on the siren label, save and apply the configuration: the real time will show a green icon, as shown in the following image.

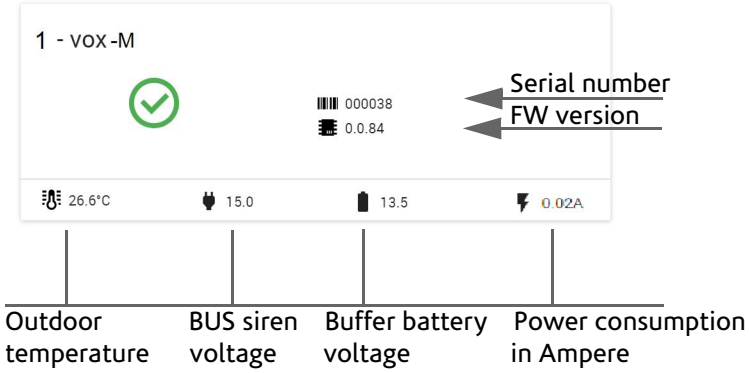

2. Enter the configuration options, here below the description:

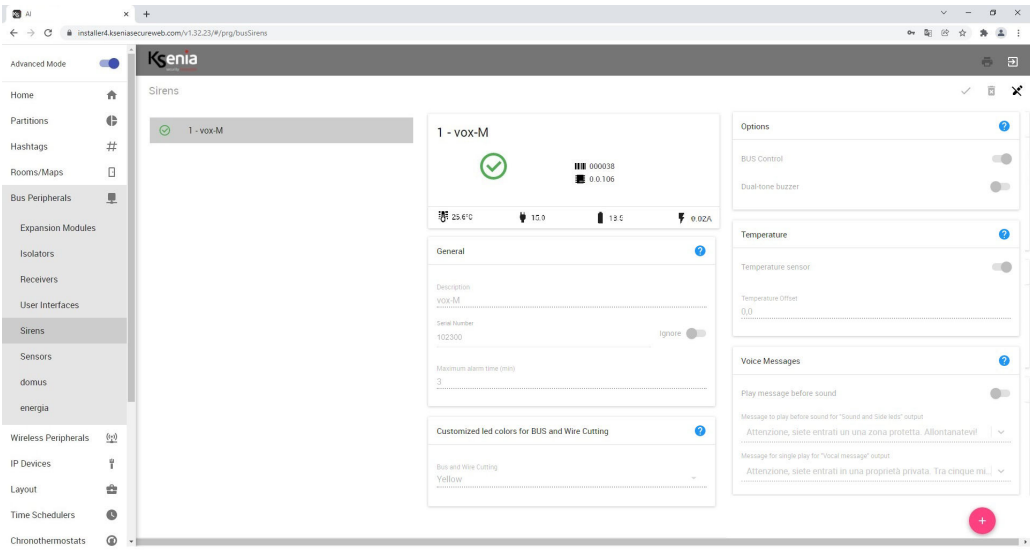

- **Maximum alarm time (min)**: You can set the maximum activation time of the acoustic signal. When the maximum time expires, the siren will stop even if it does not receive the reset command from the control panel.

- **BUS Control**: If enabled, in case of communication failure with the BUS of the control panel for more then 10 seconds, the siren will play a sound and emit a luminous signal (the lateral leds of the siren flash alternately, the color is customized in "Customized led colors for bus and wire cutting" page 11).
  In the event of a power cables cut, the siren will emit the acoustic and light signal immediately even if the option is not enabled.

- **Dual tone buzzer**: if this option is enabled, the acoustic signalling is carried out by means of a sound with two distinct frequencies (bi-tonal), otherwise in a continuous "sweep" mode.

- **Temperature sensor**: If disabled, the siren does not send the outdoor temperature to the control panel.

- **Offset temperature**: it is the offset that will be applied to the outdoor temperature detected by the sensor on board of the siren. It can be a value between -5°C and +5°C step of 0.1°C.

- **Customized led colors for bus and wire cutting**
  select the color of the side LEDs that flash alternately in case of power supply wire cutting or, if enabled, BUS communication lost for a time exceeding 10 seconds.

- **Customized led colors for output** "Sound and side leds"
  select the color of the side LEDs that flash alternately for this type of output.

- **Customized led colors for output** "Side leds"
  select the color of the side LEDs that flash alternately for this type of output.

"Play message before sound" and the fields present in the "Voice Messages" section are described in the paragraph "Voice messages configuration" page 14

LED outputs configuration

From WEB "Installer" application, open SYSTEM -> OUTPUTS menu and configure the following options:

- SOUND AND SIDE LEDS
- WHITE LED
- SIDE LEDS
- VOCAL MESSAGE

Find how to program them and the description of their functionality below.

- **SOUND AND SIDE LEDS**:
  This configuration triggers the sound (continuous or two-tones according to the configuration of the peripheral BUS) and the alternate flashing of both the lateral LEDs, the color is customized in "Customized led colors for output "Sound and side leds"" page 11.

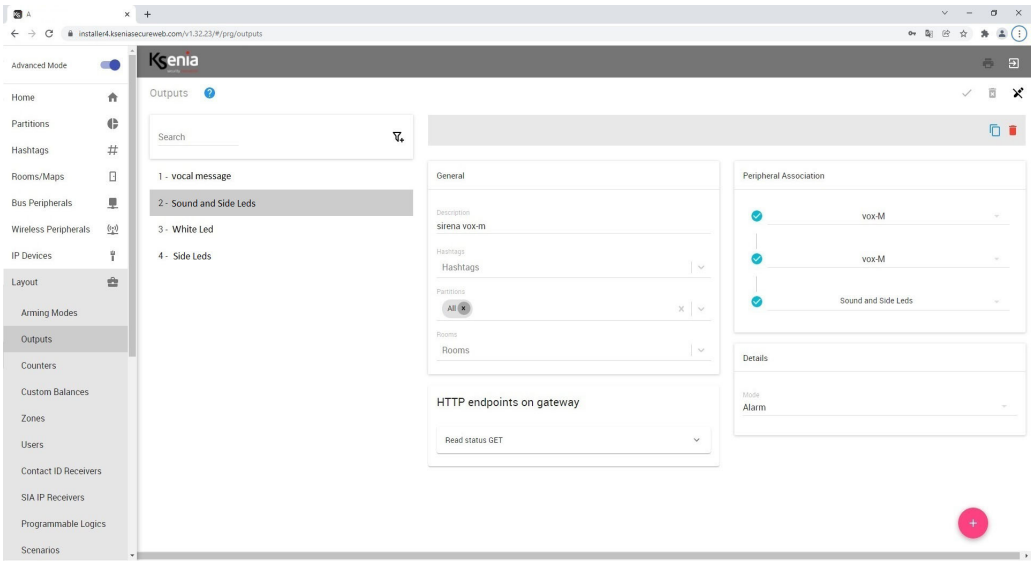

Alarm Mode = it is activated when the partition (or partitions) associated with it, triggers an alarm.

- **WHITE LED**
  This configuration allows the user to switch on and off the white spotlight both from lares 4.0 user App and Maps/Rooms.

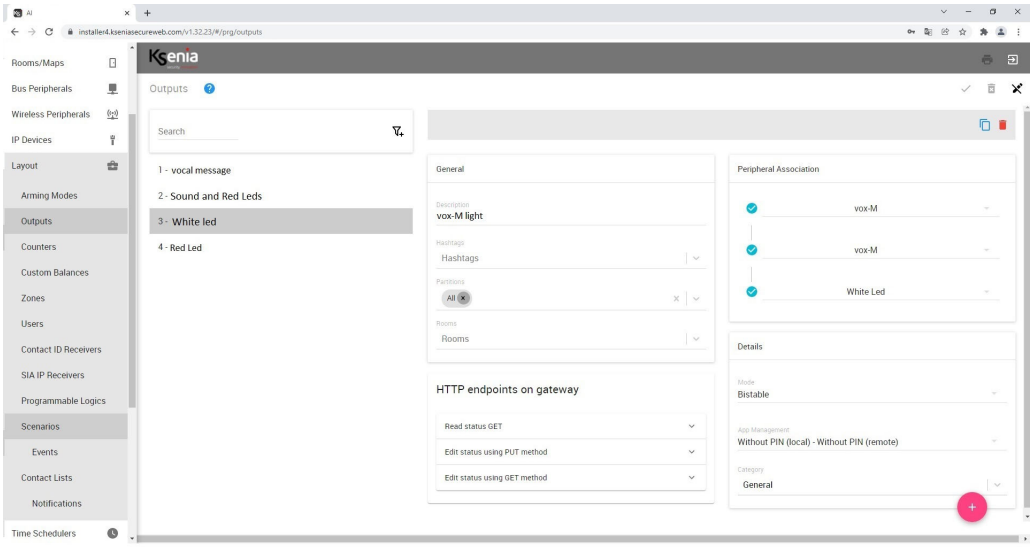

Bistable mode = it is an output that follows the status of the related event or that can be activated by an event and deactivated by another one.

Category: LIGHT = the output called "vox-M Light"(in our example), category = LIGHT, will be displayed on the Smart Home page -> "LIGHT" of lares 4.0 User App.

- **SIDE LEDS**
  This configuration triggers the alternate flashing of both the lateral LEDs, the color is customized in "Customized led colors for output "Side leds"" page 11.

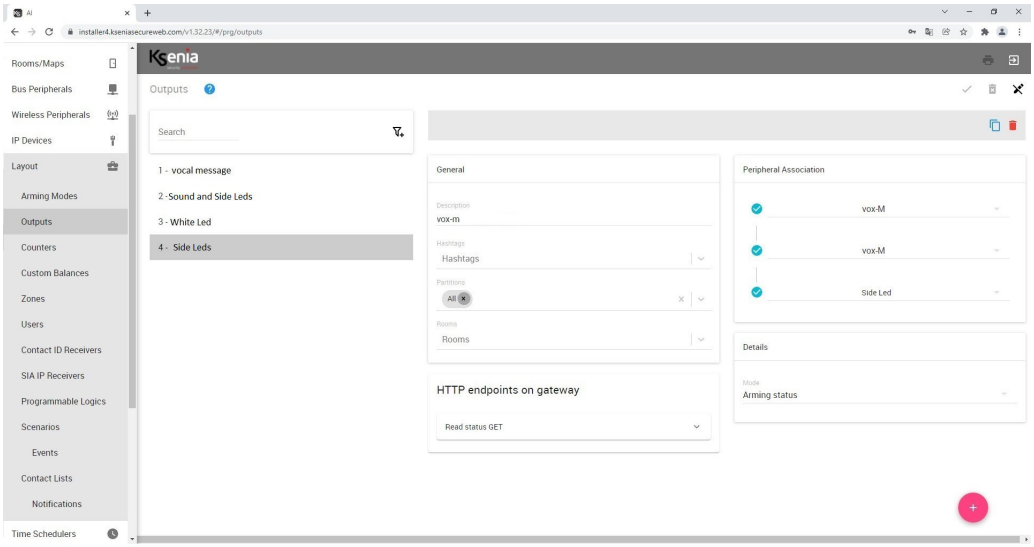

Arming status mode = the output follows the arming status of the partition (or partitions) to which it is associated. If even only one partition, among all the partitions to which the siren belongs, is armed, the output is activated, when all the partitions to which the siren belongs are disarmed, the output is deactivated.

Voice messages configuration

1. From WEB "Installer" application, open SETTINGS -> GENERAL OPTIONS menu, “Voice messages” section and configure up to 6 voice messages.

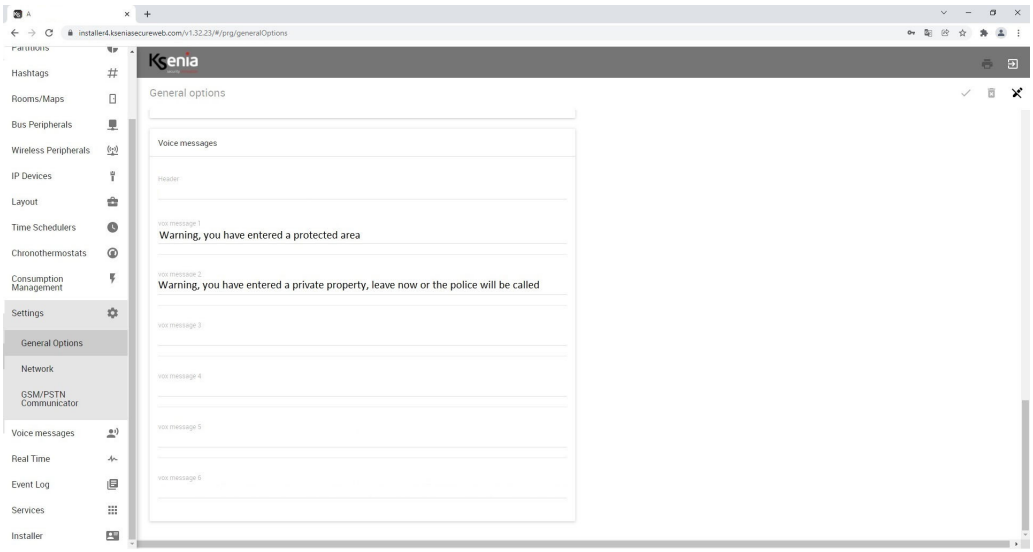

Enter the text of voice messages, one in each field; they will be associated (see point 2.) to each vox-M siren configured in the system. The Speech Synthesis translates any text into audible speech when you generate all the messages and you can listen to them from the VOICE MESSAGES -> PLAY menu, “Section vox sirens”, as the following image shows.

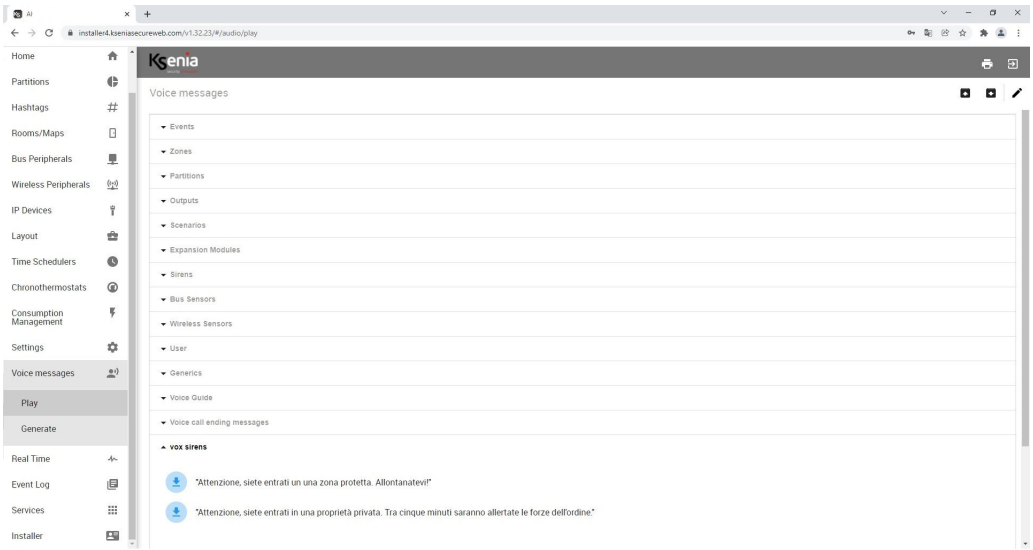

The limit of characters of free text is 120.

The first two default messages are editable texts:

The texts of messages 3, 4, 5 and 6 are empty and customizable.

REMEMBER! Any changes to the message text require its regeneration.

2. Open BUS PERIPHERALS -> SIRENS -> vox-M menu to combine siren with messages.

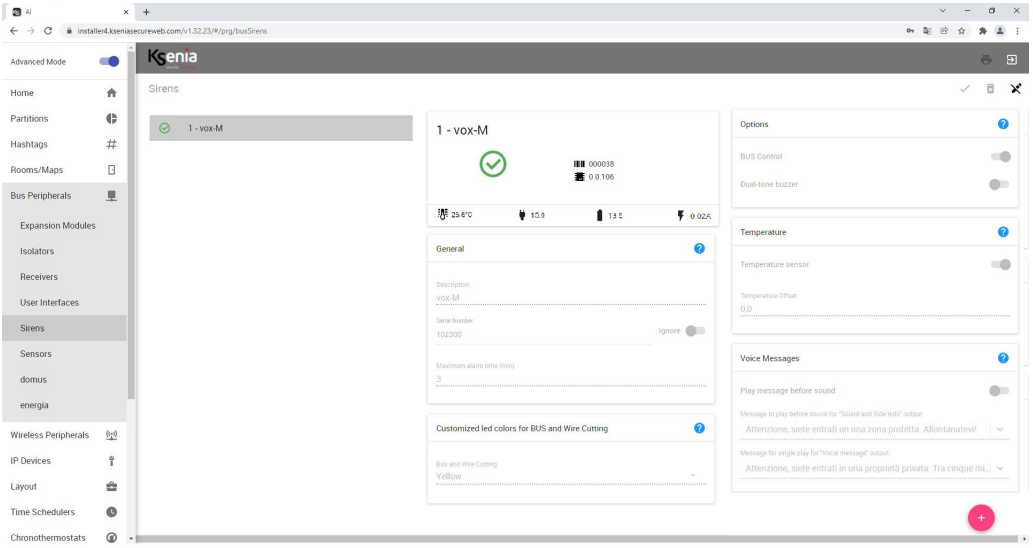

Fill the following fields:

- **Play message before sound** (default value: disabled) = if enabled, the siren plays the message configured in the "Message to play before sound" field and then it plays the sound, when trigger an alarm.

- **Message to play before sound** = this message will play before the sound if the "Play message before sound" field is enabled. The default message can be replaced with one of the messages configured on the General Options page.

- **Message for single play**: this message will play when the "Vocal message" output of vox-M is activated (*see point 3.*), if configured. The default message can be replaced with one of the messages configured on the General Options page.

It is NOT necessary to make any changes if the default configuration fits your needs: in this case, the first message "*Warning, you have entered a protected area*" won't play, while the second message "*Warning, you have entered a private property, leave now or the police will be called*" will play if you configure the relative output (*see point 3.*) and activate it directly or through a scenario.

3. Open LAYOUT -> OUTPUTS -> vox-M menu for configuring the “Voice message” output of vox-M siren.

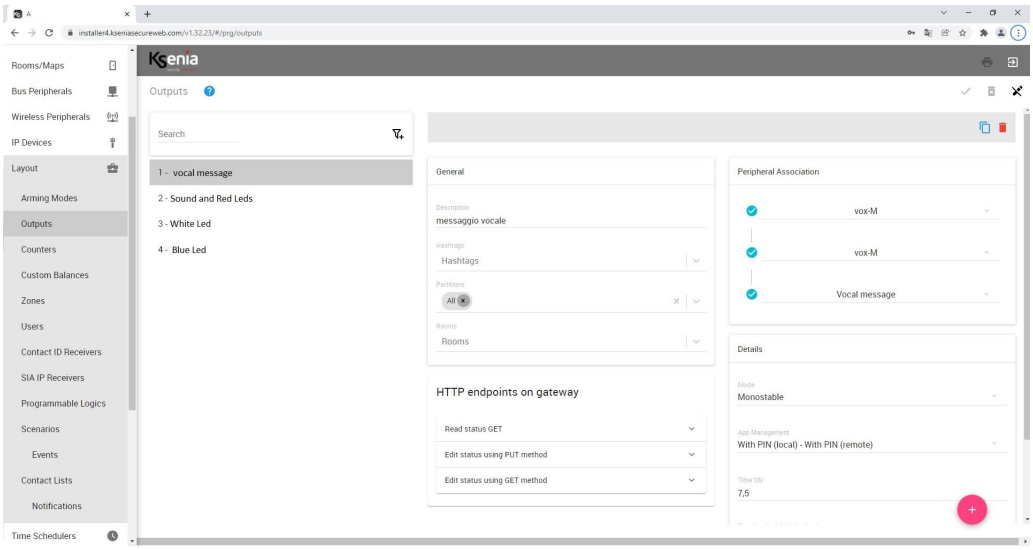

Configure the function of the output as **Monostable** or **Bistable**; the differences are described below:

- if **Monostable**, the duration of the message will last for the time configured in the field “Time ON”; so it is important to configure a sufficient lasting value for completely playback the message.
  If Time ON is longer than the duration of the message, the playback will restart until the expiration of the Time ON;

- if **Bistable**, the playback of the message will last until the output is active.

QUANTITY DATA

lares 4.0 models	wls 96	16	40	40 wls	140 wls	644 wls
Maximum number of BUS sirens	1	6	24	24	40	49

Technical specification, appearance, functional and other product characteristics may change without notice.

CERTIFICATIONS

Europe - RoHS, CE
vox-C : not covered by IMQ SECURITY SYSTEM certification
vox-M: IMQ : CA12.02103 - Grade 3
INCERT : T031: 2017 + A1:2018 + A2:2022

D-Q2T-0026

ENVIRONMENTAL CARE

vox-M sirens have been designed and manufactured with the following characteristics to reduce its environmental impact:
1. Halogen-free laminates and leads-free PCBA
2. Low current consumption
3. Packaging made mostly of recycled fibers and materials and materials obtained from renewable sources

Installation of these systems must be carried out strictly in accordance with the instructions described in this manual, and in compliance with the local laws and bylaws in force. These products have been designed and made with the highest standards of quality and performance adopted by Ksenia Security. Is recommended that the installed system should be completely tested at least once a month. Test procedures depends on the system configuration. Ask to the installer for the procedures to be followed.
Ksenia Security spa shall not be responsible for damage arising from improper installation or maintenance by unauthorized personnel.
The content of this guide can change without prior notice from KSENIA SECURITY.

Warning! Do not use an ordinary dustbin to dispose of this equipment.
Used electrical and electronic equipment must be treated separately, in accordance with the relative legislation which requires the proper treatment, recovery and recycling of used electrical and electronic equipment.
Following the implementation of directives in member states, private households within the EU may return their used electrical and electronic equipment to designated collection facilities free of charge. Local retailers may also accept used products free of charge if a similar product is purchased from them.*
If used electrical or electronic equipment has batteries or accumulators, these must be disposed of separately according to local provisions.
Correct disposal of this product guarantees it undergoes the necessary treatment, recovery and recycling. This prevents any potential negative effects on both the environment and public health which may arise through the inappropriate handling of waste.
**Please contact your local authority for further details.*